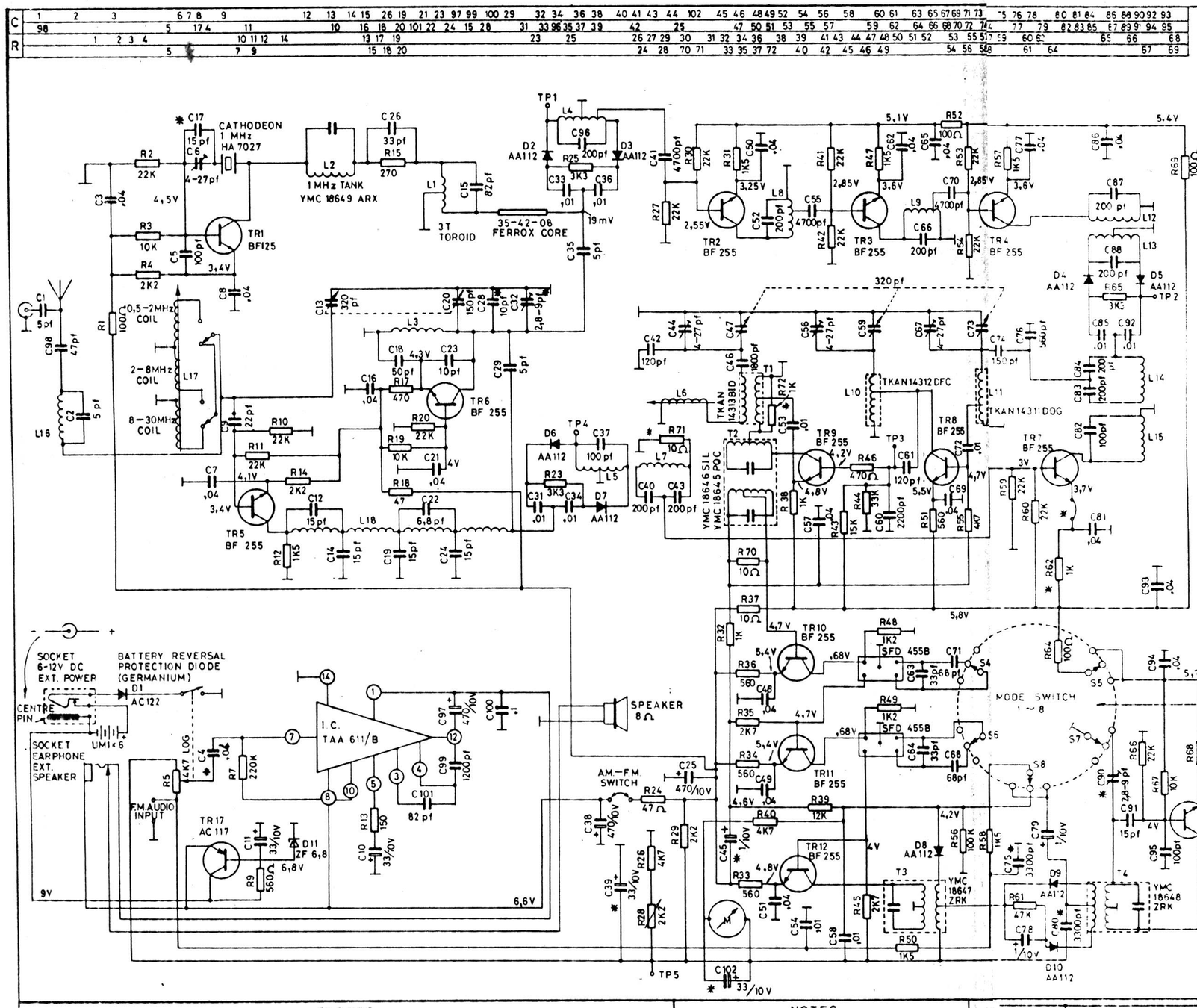

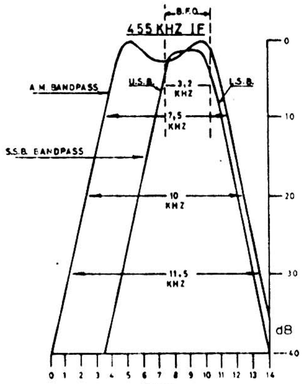

FIG. 3.

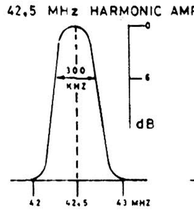

FIG. 1.

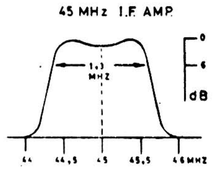

FIG. 2.

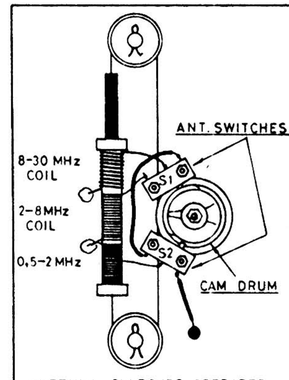

ANTENNA SWITCHES OPERATED BY CAM DRUM ON ANT TUNE CONTROL. SWITCHING SHOWN IN 8-30MHz POSITION

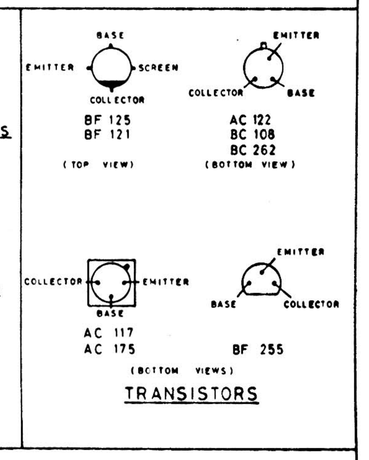

TRANSISTORS

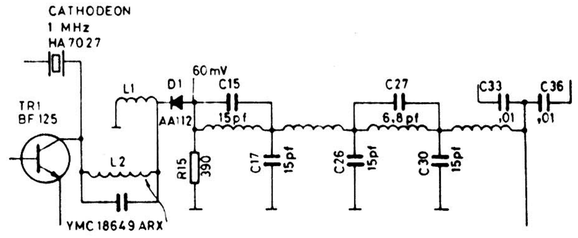

HARMONIC GENERATOR FILTER (UP TO JUNE 1974)

DIODES

D1 AC 122 PROTECTION DIODE
D2, D3 AA 112 MATCHED PAIR (BALANCED MIXER Nº 1)
D4 D5 AA 112 MATCHED PAIR (BALANCED MIXER Nº 3)
D6 D7 AA 112 MATCHED PAIR (BALANCED MIXER Nº 2)
D8 AA112 A.M. DETECTOR
D9 D10 AA112 MATCHED PAIR SSB DETECTION
D11 ZF 6,8 VOLTAGE REGULATOR

TRANSISTORS

TR1 HARMONIC GENERATOR
TR2, TR3, TR4 42,5 MHz HARMONIC AMP.
TR5 R.F. AMP.
TR6 FIRST OSC.
TR7 45 MHz AMP.
TR8 2 TO 3 MHz AMP. } INTERPOLATION SECTION
TR9 2 TO 3 MHz OSC. MIXER. } INTERPOLATION SECTION
TR10, TR11, TR12 455 KHz I.F. AMP.
TR17 D.C. SUPPLY REGULATOR
TR18 B.F.O. OSCILLATOR

NOTE: TRANSISTORS TR1 — TR12 & TR18 WERE BF 121 & BF 125 ON EARLIER MODELS

* MODIFICATIONS

1. C75 ~ C80 2200 pf SERIAL Nº s 0001 TO 0100 ONLY
2. C90 2,5 TO 6pf SERIAL Nº s 0001 TO 1100 ONLY
3. C32 7-35pf (AND C28 NOT FITTED) ON EARLY MODELS
4. VALUE OF R40 ON EARLIER MODELS:-
   a) 1K5 WITH METER TYPE KISHO Y04 600
   b) 3K9 WITH METER TYPE TOYO MUSSEN V81
5. C17 ADJUSTING CAPACITOR

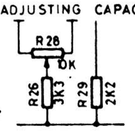

6. APPLICABLE TO SERIAL Nº s 0001 TO 0100 ONLY

NOTES

VOLTAGES SHOWN ON THIS DIAGRAM CAN VARY DEPENDING ON THE ACTUAL ZENER DIODE AND RESISTOR TOLERANCES, AND ARE NEGATIVE WITH RESPECT TO CHASSIS.

ALL CAPACITOR VALUES ARE SHOWN IN µf (MICROFARAD) EXCEPT THOSE INDICATED pf (PICOFARAD)

EVERY EFFORT IS MADE TO KEEP THIS DIAGRAM UP TO DATE — BUT THE RIGHT IS RESERVED TO USE DIFFERENT COMPONENTS OR AMEND THE CIRCUIT WITHOUT NOTICE.

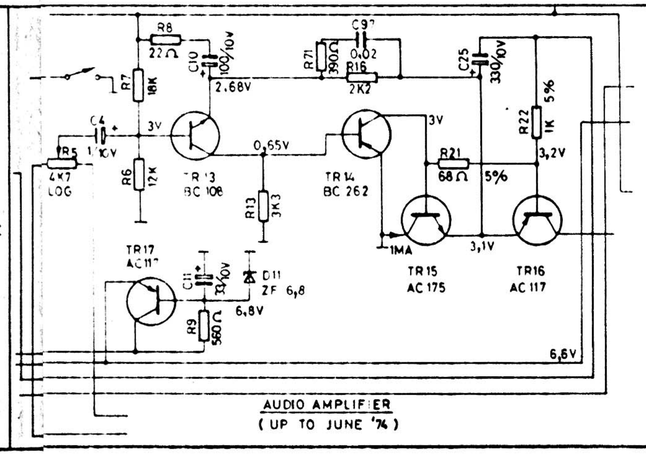

AUDIO AMPLIFIER (UP TO JUNE '74)

* MODIFICATIONS (FROM DECEMBER 1974)

7. C4 FROM 1µF TO 0,04µF
8. R71 10Ω RESISTOR FROM JUNCTION OF L7/C43 TO POSITIVE CHASSIS
9. C39 FROM 470 µF/10V TO 33 µV/10V
10. R72 1K RESISTOR FROM TAP OF L2 TO POSITIVE CHASSIS
11. ADDITION OF C102 33µF/10V CAPACITOR ACROSS THE METER
12. R62 2K2Ω NOW BECOMES 1KΩ
13. R63 100Ω NOW BECOMES A WIRE LINK
14. C45 33 µF/10V NOW BECOMES 1µF/10V
15. C50 AND C62 NOW PLACED UNDER THE CIRCUIT BOARD AND NOT ON THE COMPONENT SIDE

UNIT mm	PROJECTION	MODIFICATION	DATE
TOLERANCES UNLESS O'WISE INDICATED	MATERIAL	FINISH	
DRAWN S. F. H.	DATE 14-6-74	TITLE CIRCUIT DIAGRAM MKII	DRG. No. 7470
TRACED	DATE		
MECH APPR.	DATE 31-7-74	MODEL BARLOW WADLEY XR 800 C	SCALE
ELEC. APPR.	DATE 31-7-74		

BARLOWS TELEVISION COMPANY NEW GERMANY NATAL