TIME MODULE

Revised on: 19. May. 2010

TECHNICAL GUIDE

&

PARTS CATALOGUE

Cal.NH25/26

AUTOMATIC MECHANICAL

SII Products

PARTS CATALOGUE / TECHNICAL GUIDE
Cal.NH25/26

TIME MODULE

[SPECIFICATION]

Version-02

Item \ Cal. No.		NH25	NH26
Movement		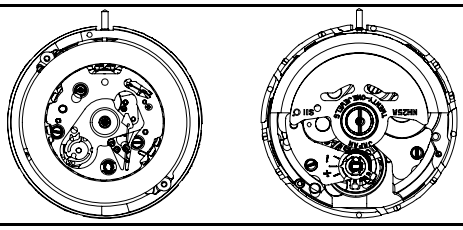	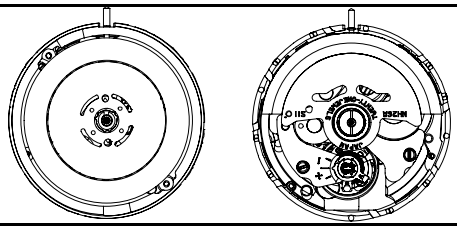
Movement size	Outside diameter	Φ27.40mm	
	Casing diameter	Φ29.255mm (with dial holding spacer)	
	Total height	5.32 mm	
Time indication		3 Hands (Hour , Minute , Second) Date Calendar	3 Hands (Hour , Minute , Second) Day & Date Calendar
Basic function		Automatic winding with ball bearing Date display with quick date correction	Automatic winding with ball bearing Day & Date display with quick day & date correction
Frequency		21,600 vibrations per hour	
Accuracy	Static accuracy	-25~+35 seconds per day * Measurement should be done within 10~60 minutes after fully wound up. * All measurements are made without the calendar in function.	
	Measurement position	Direction of 3 position. (1) Dial up (2) 9 o'clock (3) 6 o'clock	
	Lift angle	53 deg.	
	Measurement time	20 seconds * Equipment to be used : Witschi WATCH EXPERT	
	Posture difference	Difference is under 60 seconds within max value and min value. * Measurement should be done within 10~60 minutes after fully wound up. * Direction of 4 positions. (1) 12 o'clock (2) 9 o'clock (3) 6 o'clock (4) 3 o'clock	
	Isochronisms (24h-0h)	-20~+40 seconds par day. * Direction of position. : Dial up * Difference of static accuracy of 24h and 0h	
Duration time		More than 41 hours … Mainspring after fully wound up. * Posture to confirmation : Dial up	
Winding the mainspring		There are no manual winding function for Cal. NH25/26. The following procedures are recommended for winding up the mainspring of Cal.NH25/26. << Movements >> The mainspring would be fully wounded up by turning the ratchet wheel screw 8 times. << Complete Watch >> A winding machine is needed to wind up the mainspring. Full wind up conditions ・Rotary speed : 30 rpm ・Operating time: 60 minutes	
Jewels		21 jewels	

Crown position		NH25		NH26	
		Left rotation	Right rotation	Left rotation	Right rotation
	Normal position	Free	Free	Free	Free
	First click	Free	Date setting	Day setting	Date setting
	Second click	Hand setting		Hand setting	

Disassembling procedures Figs. NH25 (4) NH26 (1) → (43) Reassembling procedures Figs. (43) → NH25 (4) NH26 (1)	**Type of oil** Moebius 9010 MO-4 MO-3	**Oil quantity mark** NORMAL QUANTITY SUFFICIENT QUANTITY

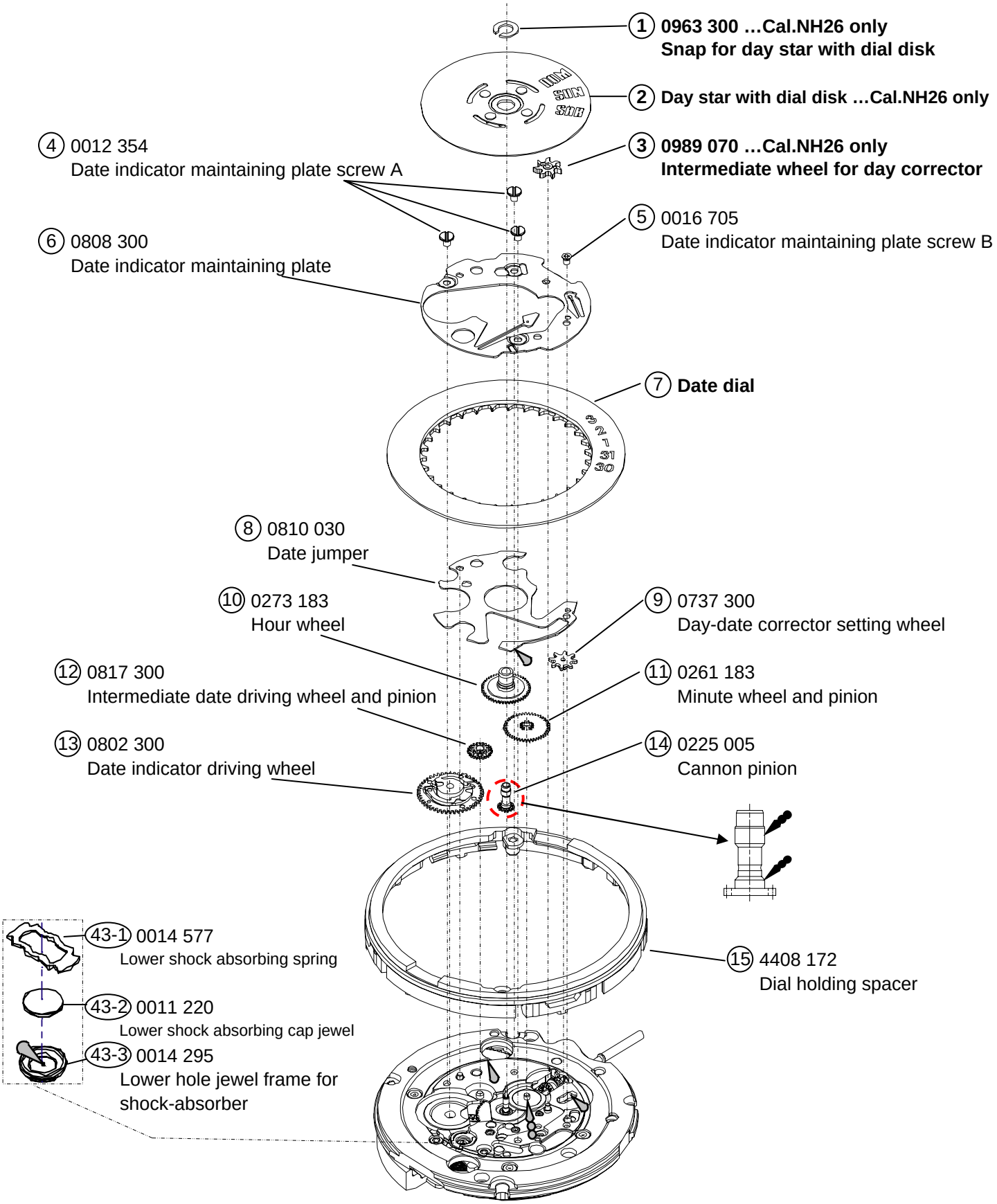

Type of oil
Moebius 9010
MO-4
MO-3

Oil quantity mark
NORMAL QUANTITY
SUFFICIENT QUANTITY

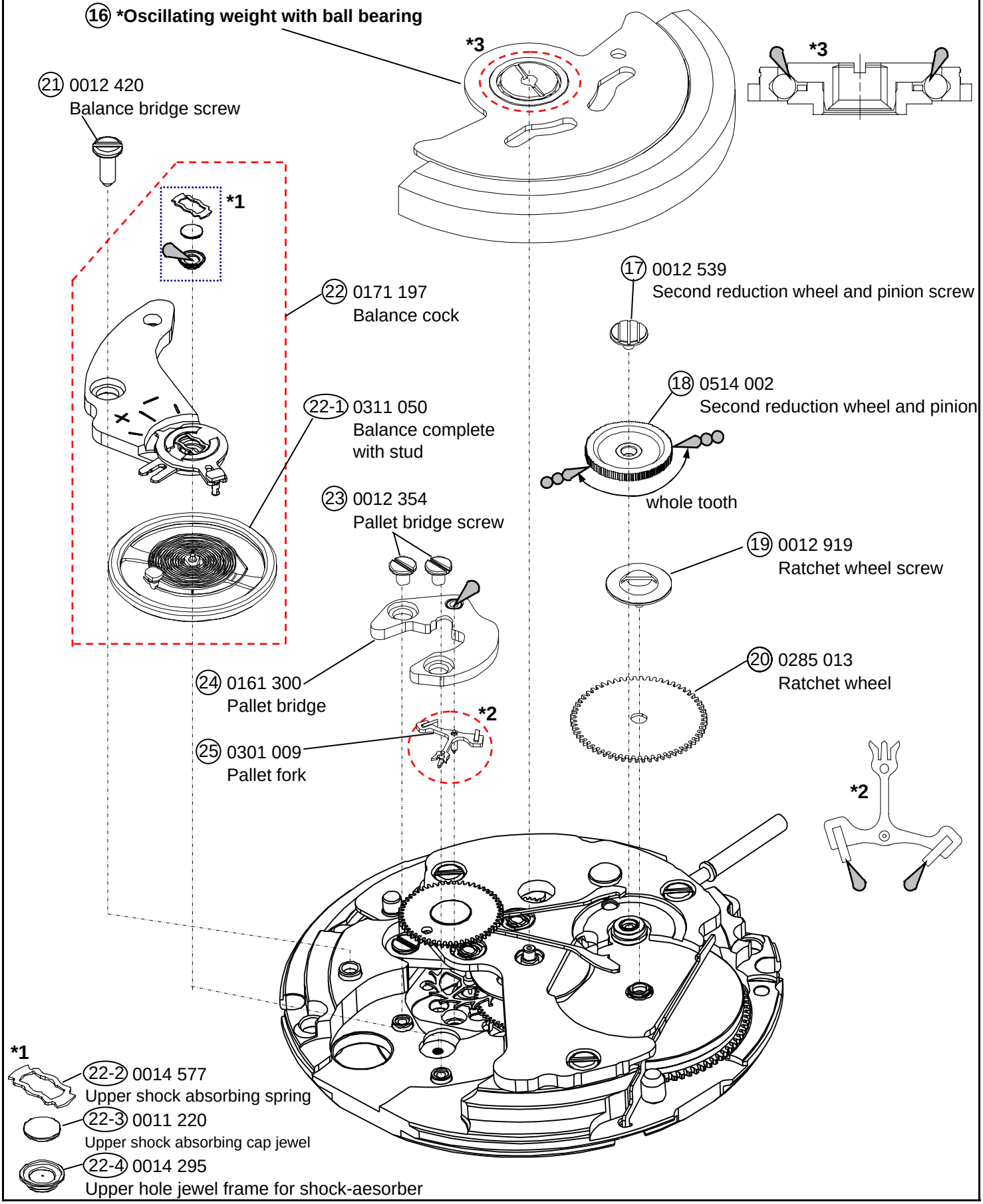

Type of oil
Moebius 9010
MO-4
MO-3

Oil quantity mark
NORMAL QUANTITY
SUFFICIENT QUANTITY

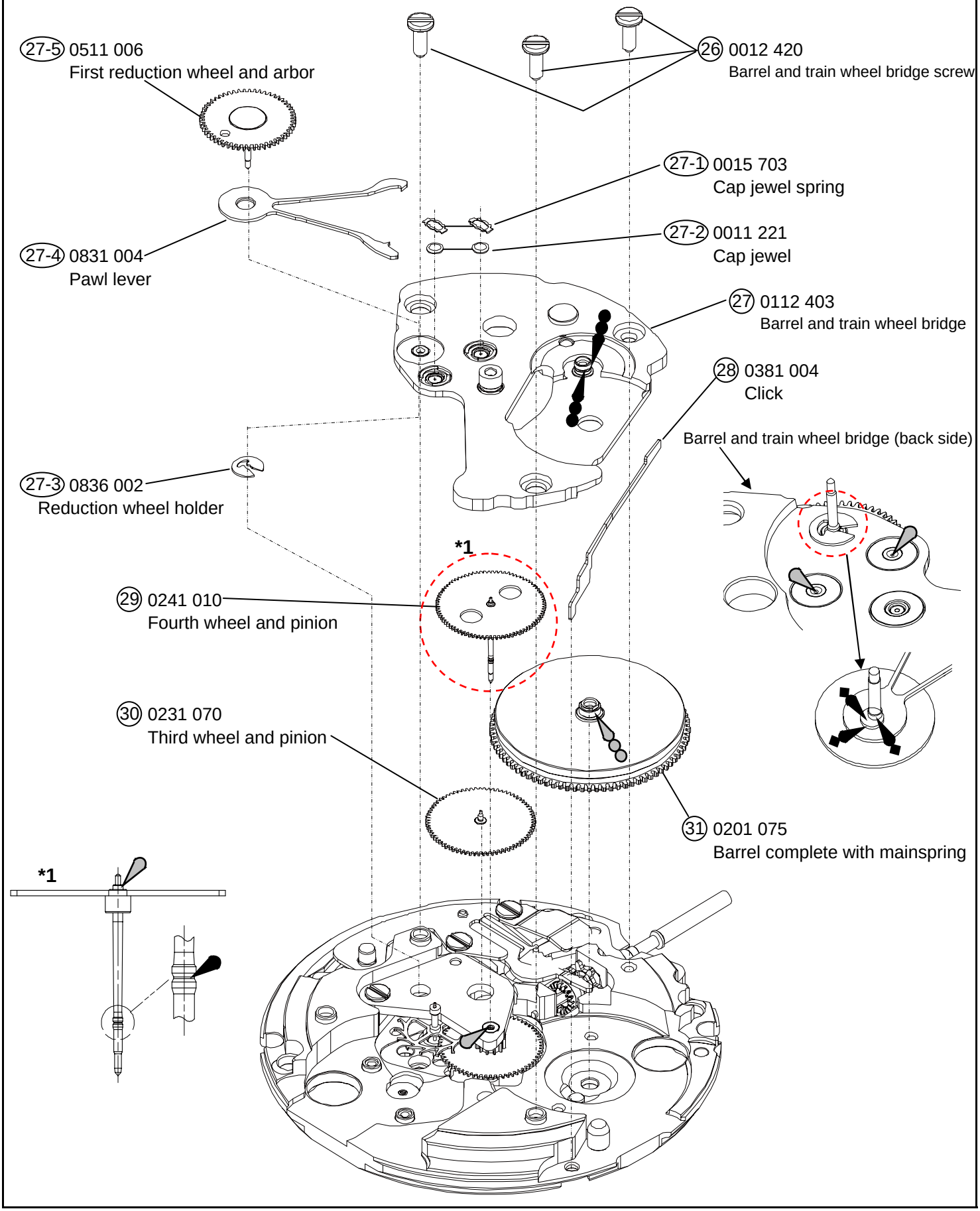

Type of oil
Moebius 9010
MO-4
MO-3

Oil quantity mark
NORMAL QUANTITY
SUFFICIENT QUANTITY

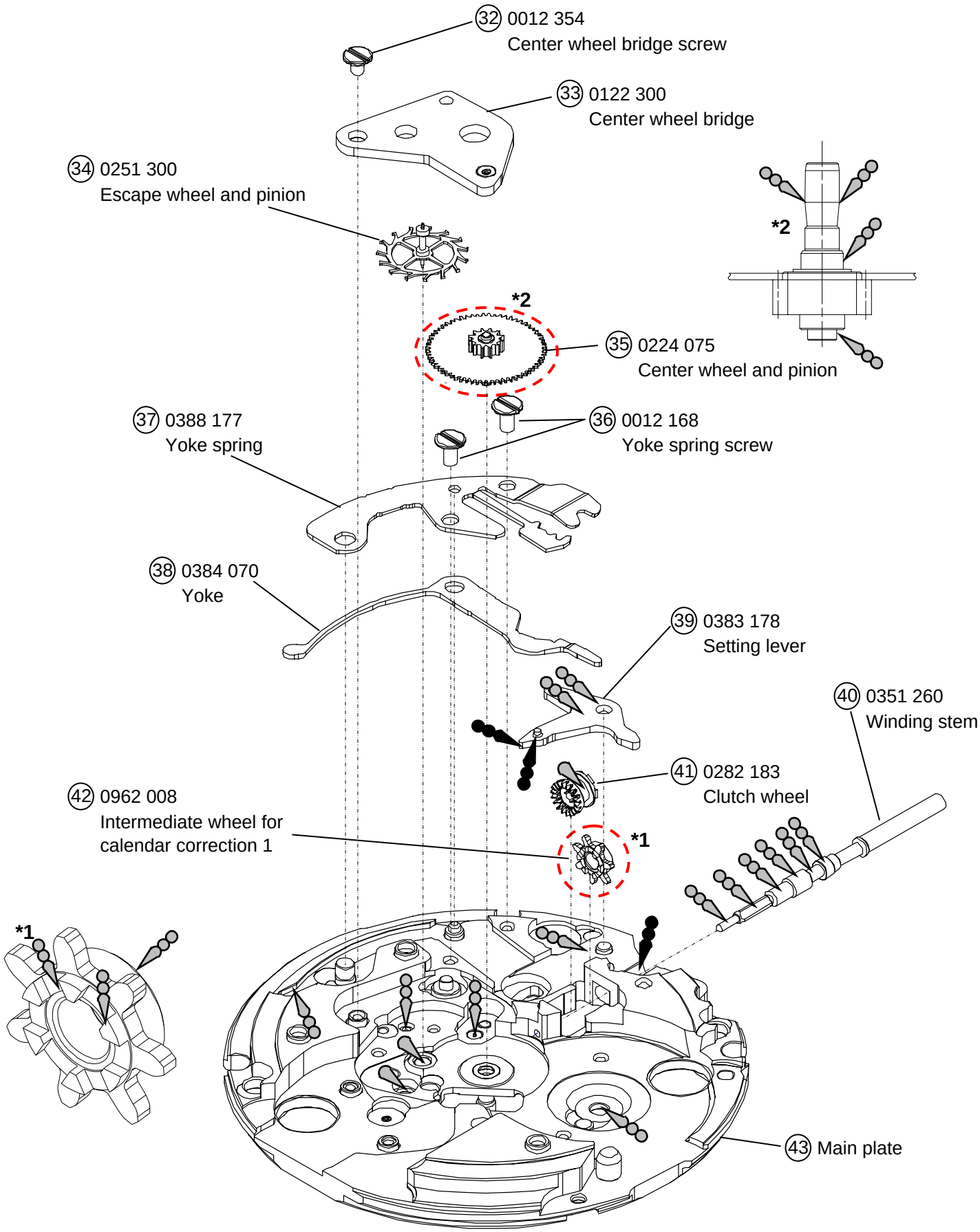

Remarks

② Day star with dial disk ...Cal.NH26 only

Parts code	Position of crown	Position of date frame	Color of letters	Color of background	Language
0160 242	3H	3H	MON～FRI : Black SAT :Blue SUN :Red	White	English & Spanish

⑦ Date dial

Cal. code	Parts code	Position of crown	Position of date frame	Color of numbers	Color of background
NH25	0878 270	3H	3H	Black	White
	0878 274	3H	6H	Black	White
NH26	0878 280	3H	3H	Black	White

⑯ Oscillating weight with ball bearing

Cal. code	Parts code	Marking	Cal. code	Parts code	Marking
NH25	0509 242	Japan mark	NH26	0509 245	Japan mark
	0509 243	Malaysia mark		0509 246	Malaysia mark

● **List of screws**

Parts No	Name	Parts No	Name	Parts No	Name
0012 919 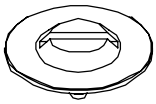	⑲ Ratchet wheel screw	**0012 354** 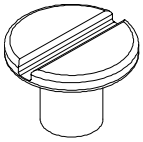	㉜ Center wheel bridge screw ㉓ Pallet bridge screw (×2) ④ Date indicator maintaining plate screw (A) (×3)	**0012 420** 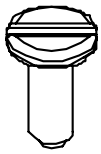	㉖ Barrel and train wheel bridge screw (×3) ㉑ Balance bridge screw
0012 539 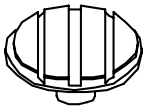	⑰ Second reduction wheel and pinion screw				
0012 168 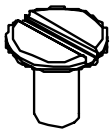	㊱ Yoke spring screw (×2)	**0016 705** 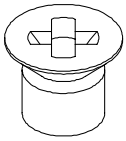	⑤ Date indictor maintaining plate screw (B)		

<u>*All parts code are subject to change without notice.</u>

・The following explanation is only for Cal.NH25/26.

1.Setting position of oscillating weight

・Before assembling oscillating weight.
Match the center of the oscillating weight with winding stem.
Set the hole of first reduction wheel gear on the imaginary line toward the balance bridge guide pin.

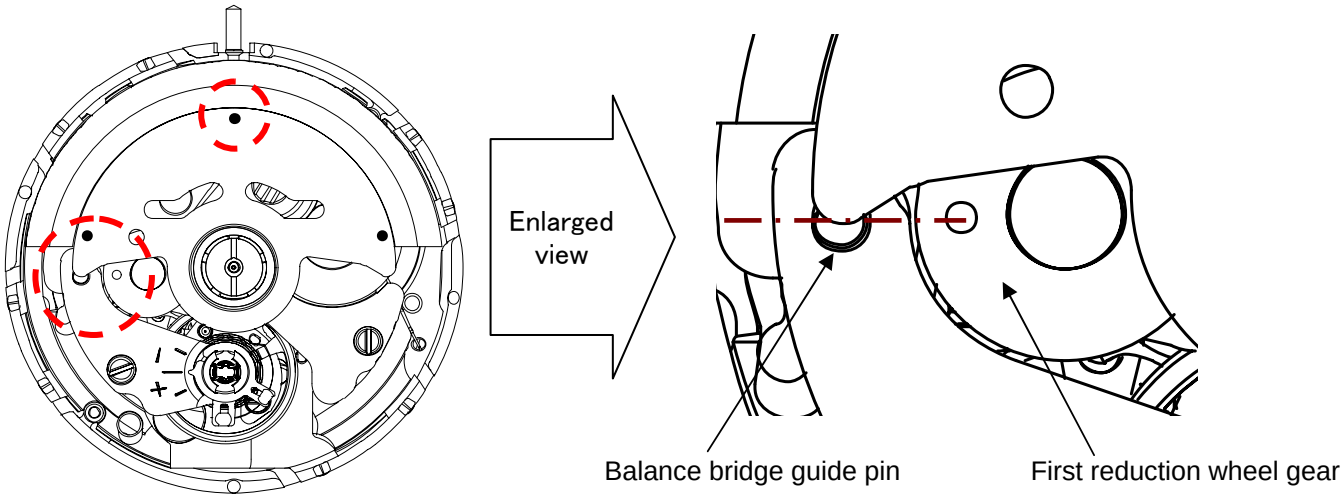

2.Disassembling / assembling of the First reduction wheel

<< Disassembling >> **<< Assembling >>**

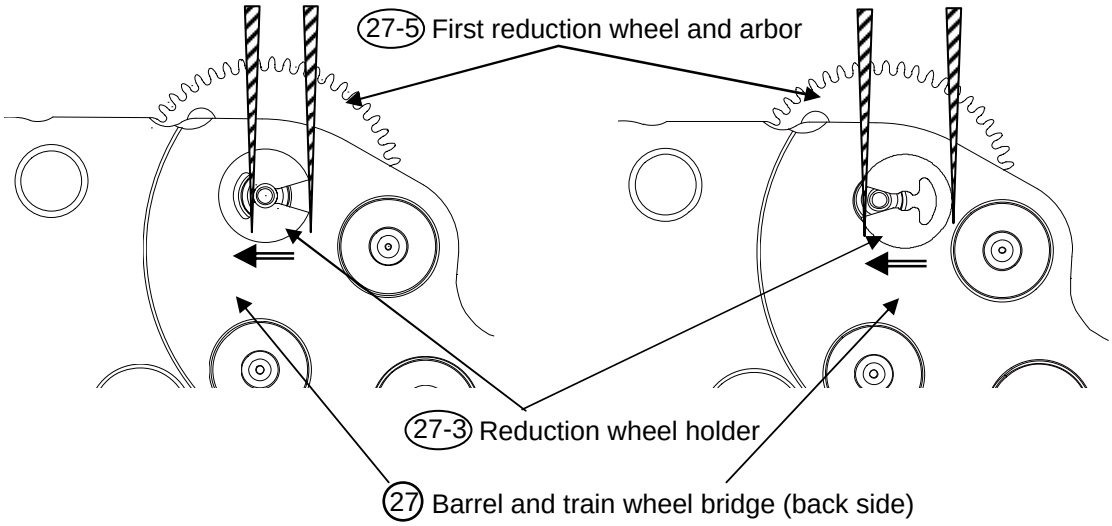

3.How to attach hands

Place the movement directly on a flat metal plate or the something similar attach the hands.
We recommend the use of movement holder to attach hands.
For hands attachment please use a special equipment.
When movement receives a strong shock, it may damage the movement.

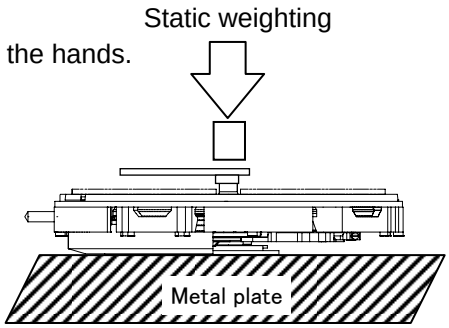

4.Rotative direction of regulator pin

・Rotative direction of regulator pin : Anticlockwise only
・Hair spring can be damaged by clockwise rotation.

〈Note〉
Please do the following when a movement's
accuracy is out of the guaranteed range, or after disassembly.

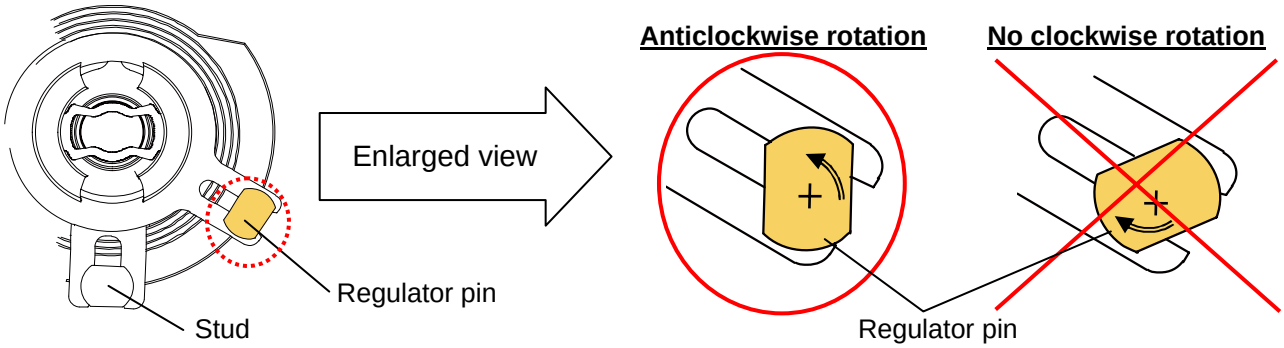

5.Second reduction wheel and pinion screw

・The direction to tightens a screw : Counterclockwise
・The direction to loosens a screw : Clockwise

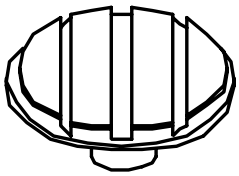

⑰ Second reduction wheel and pinion screw

6.To remove the winding stem

1) Set the winding stem to normal position.
2) Pull out the winding stem, while pushing "A"

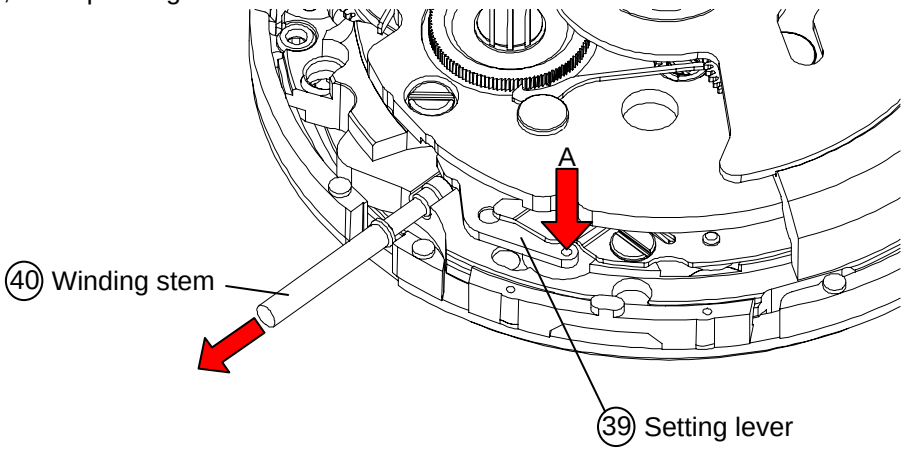

7.To wind up the mainspring

Cal. NH25/26 have no manual winding function.
The following procedures are recommended for winding up the mainspring for Cal. NH25/26.

<<Movement>>
The mainspring would be fully wounded up by turning the ratchet wheel screw 8 times clockwise.

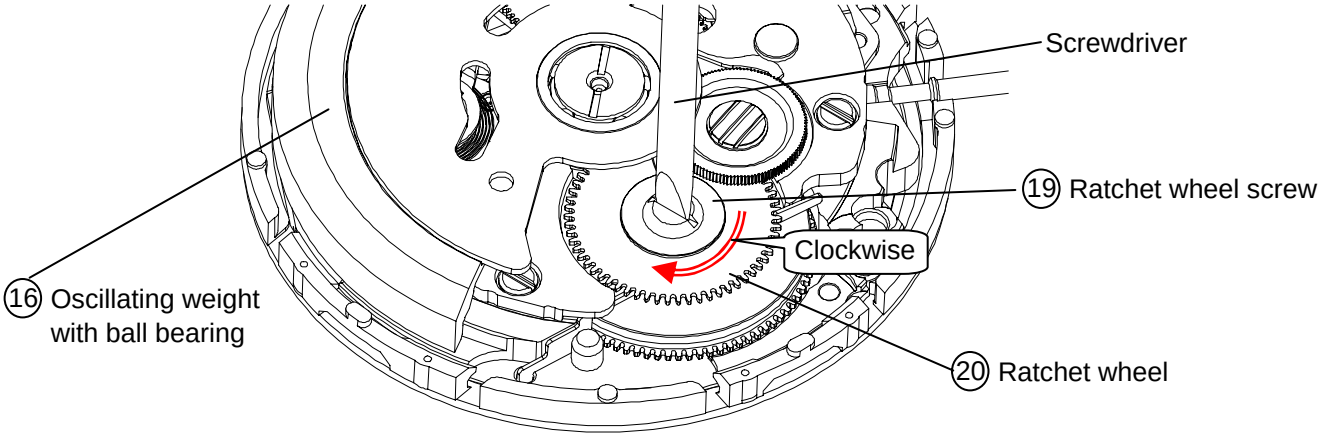

<<Complete watch>>
A winding machine is needed to wind up the mainspring.
Full wind up conditions
・Rotary speed : 30 rpm
・Operating time : 60 minutes

8.Accuracy measurement condition

Static Accuracy : -25~+35 seconds per day
Measurement Conditions
1) Measurement should be done within 10~60 minutes after fully wound up.
2) Lift angle : 53 deg.
3) Measurement position : (1) Dial up (2) 9 o'clock up (3) 6 o'clock up
4) Minimum measurement Time : 20 seconds
5) Stabilizing Time :
Leave the watch for at least 20 seconds to stabilize after you change its measurement position.

[NH25/26 operation manual]

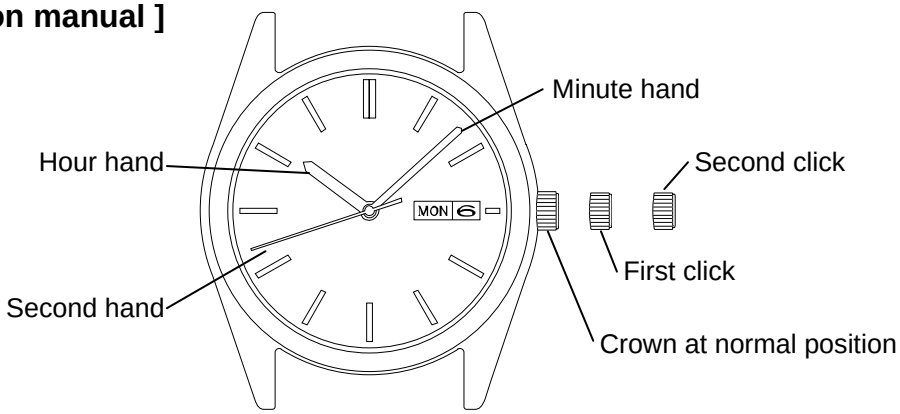

1.Time setting

1) Pull out the crown to the second position.
2) Turn the crown to set hour and minute hands.
   (Check that AM/PM is set correctly.)
3) Push the crown back in to the normal position.

2.Day and date setting

1) Pull out the crown to the first position.
2) Turn the crown to left for date setting.
3) Turn the crown to right for day setting. …Cal. NH26 only.
   * Do not set the calendar between 9:00 P.M. and 4:00 A.M. If the setting of the calendar is made during this period, the day or date will not change to the next day or date. Please set the calendar after changing the time other than the above period.
4) Push the crown back in to the normal position.